NOTES:
1. Material: undoped YAG, orientation [111];
2. G - Fine ground surface;
3. TWD < λ/10 @ 633 nm;
4.Parallelism: <10 arcsec;
5. All dimensions are in mm.

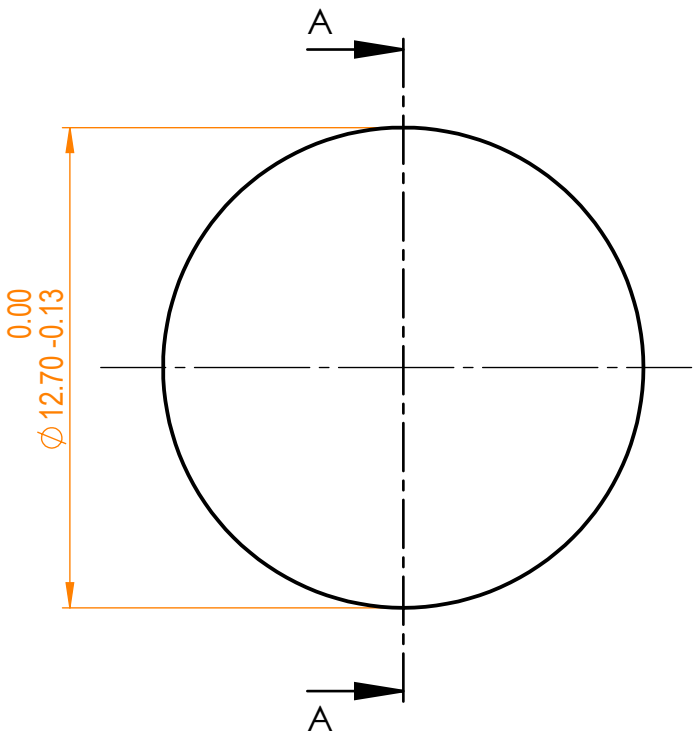

A-A

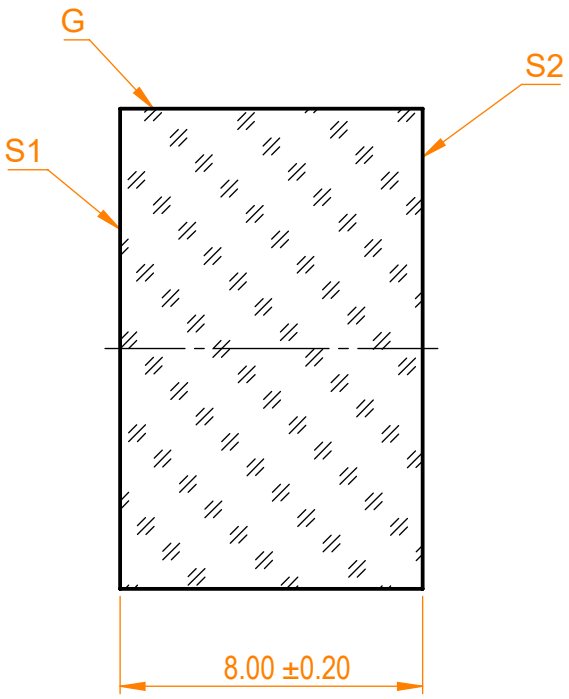

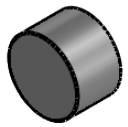

Isometric view 1:1

Specifications are subject to change without notice
Dimensions are for reference only

Parameters		
	S1	S2
Shape	Plano	Plano
Surface quality	20-10 s/d	20-10 s/d
Surface flatness	-	-
Protective chamfers	0.2 - 0.3 mm x 45°	0.2 - 0.3 mm x 45°
Clear aperture	≥90%	≥90%
Coating	-	-

EKSMA OPTICS
info@eksmaoptics.com
www.eksmaoptics.com

YAG pl window, D=12.7 mm

Proprietary		Name	Date	Part number	Rev.	Scale
The information in this drawing is property of EKSMA Optics. Any reproduction in part or as a whole without the written permission of EKSMA Optics is prohibited.	Approved	A.K.	2021.02.01	555-7128	A	5:1
	Drawn	M.B.	2021.02.01			