NOTES:
1. Material: N-SF2 (beamsplitter),
   Black anodized aluminium (housing);
2. All dimensions are in mm;
3. Protective chamfers: 0.3 mm x 45°;
4. Beam deviation: <3 arcmin;
5. Typical damage threshold: >1 J/cm^2 at @532nm;

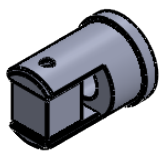

Isometric view 1:2

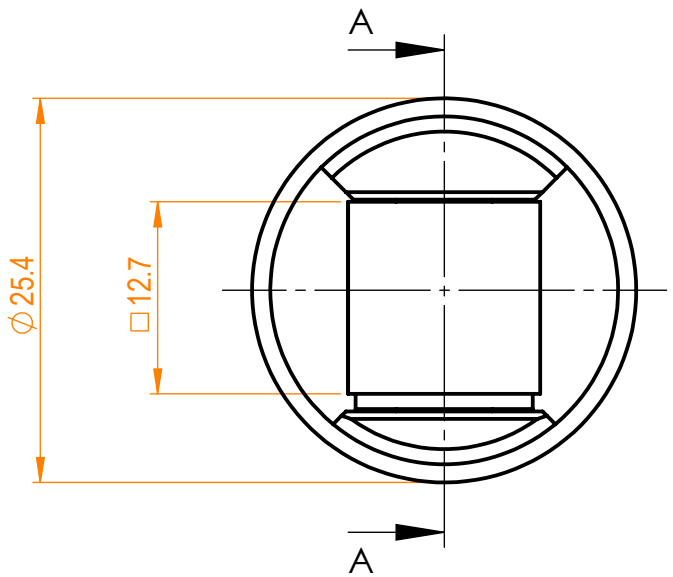

A-A

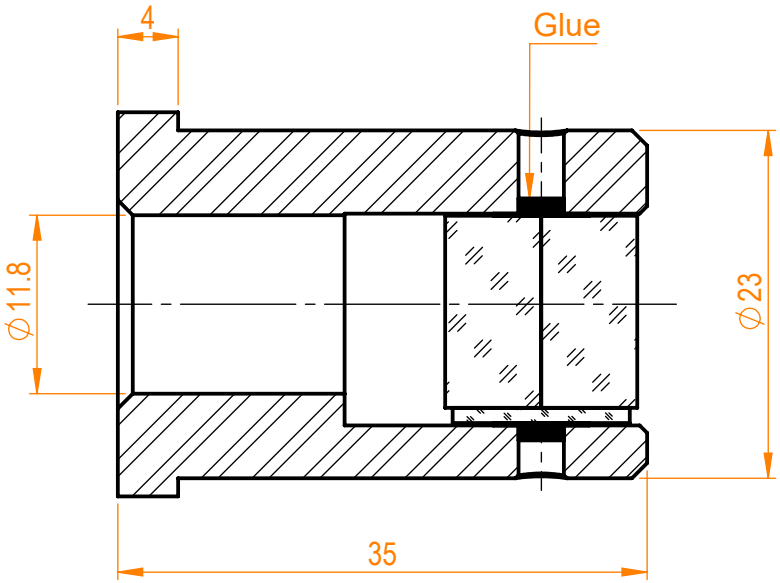

Specifications are subject to change without notice
Dimensions are for reference only

Parameters		
	All sides	Hypotenuse
Shape	Plano	Plano
Surface flatness	λ/10 @633nm	λ/10 @633nm
Surface quality	20-10 s/d	20-10 s/d
Clear aperture	>85%	>85%
Coating	AR<0.25% @420-680nm	R_s/T_p>99.5/97% @420-680nm

EKSMA OPTICS
info@eksmaoptics.com
www.eksmaoptics.com

HEPC beamsplitter, H=L=T=12.7 mm

Proprietary		Name	Date	Part number	Rev.	Scale
The information in this drawing is property of EKSMA Optics. Any reproduction in part or as a whole without the written permission of EKSMA Optics is prohibited.	Approved	A.K.	2021.04.22	436-1121-M2Ps	A	2:1
	Drawn	V.S.	2021.04.22			