NOTES:
1. Material: UVFS;
2. G - Fine ground surface;
3. All dimensions are in mm;
4. Wedge: <3 minutes;
5. Protective chamfers: 0.3 mm x 45°;
6. Laser Induced Damage Threshold: >10 J/cm^2 at @532nm, 100Hz, 10nsec pulses;

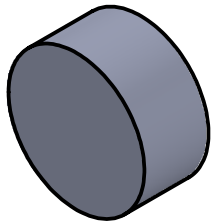

Isometric view 2:1

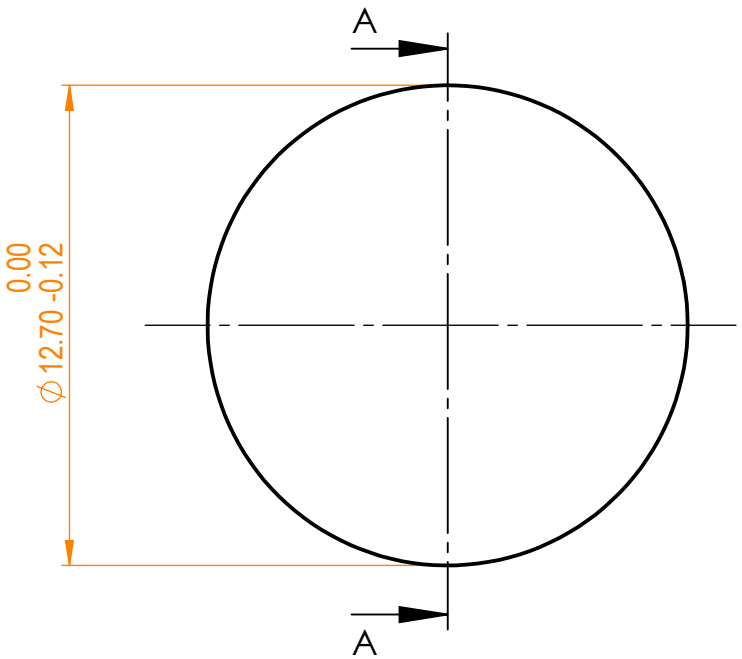

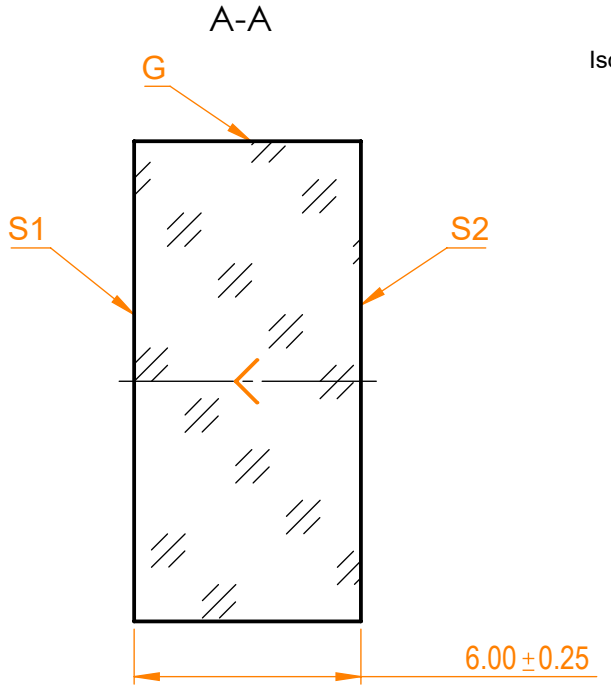

Specifications are subject to change without notice
Dimensions are for reference only

Parameters		
	S1	S2
Shape	Plano	Plano
Radius of curvature	Infinity	Infinity
Surface flatness	λ/10 @633nm	λ@633nm per inch
Surface quality	20-10 s/d	80-50 s/d
Clear aperture	≥85%	≥85%
Coating	HR(s+p)/2>99.9%@532nm, AOI=0-45°	Uncoated

EKSMA OPTICS
info@eksmaoptics.com
www.eksmaoptics.com

UVFS pl mirror, D=12.7 mm, T=6 mm

Proprietary		Name	Date	Part number	Rev.	Scale
The information in this drawing is property of EKSMA Optics. Any reproduction in part or as a whole without the written permission of EKSMA Optics is prohibited.	Approved	A.K.	2020.09.10	041-0530T6 HHR-i0-45	A	5:1
	Drawn	V.S.	2020.09.10			