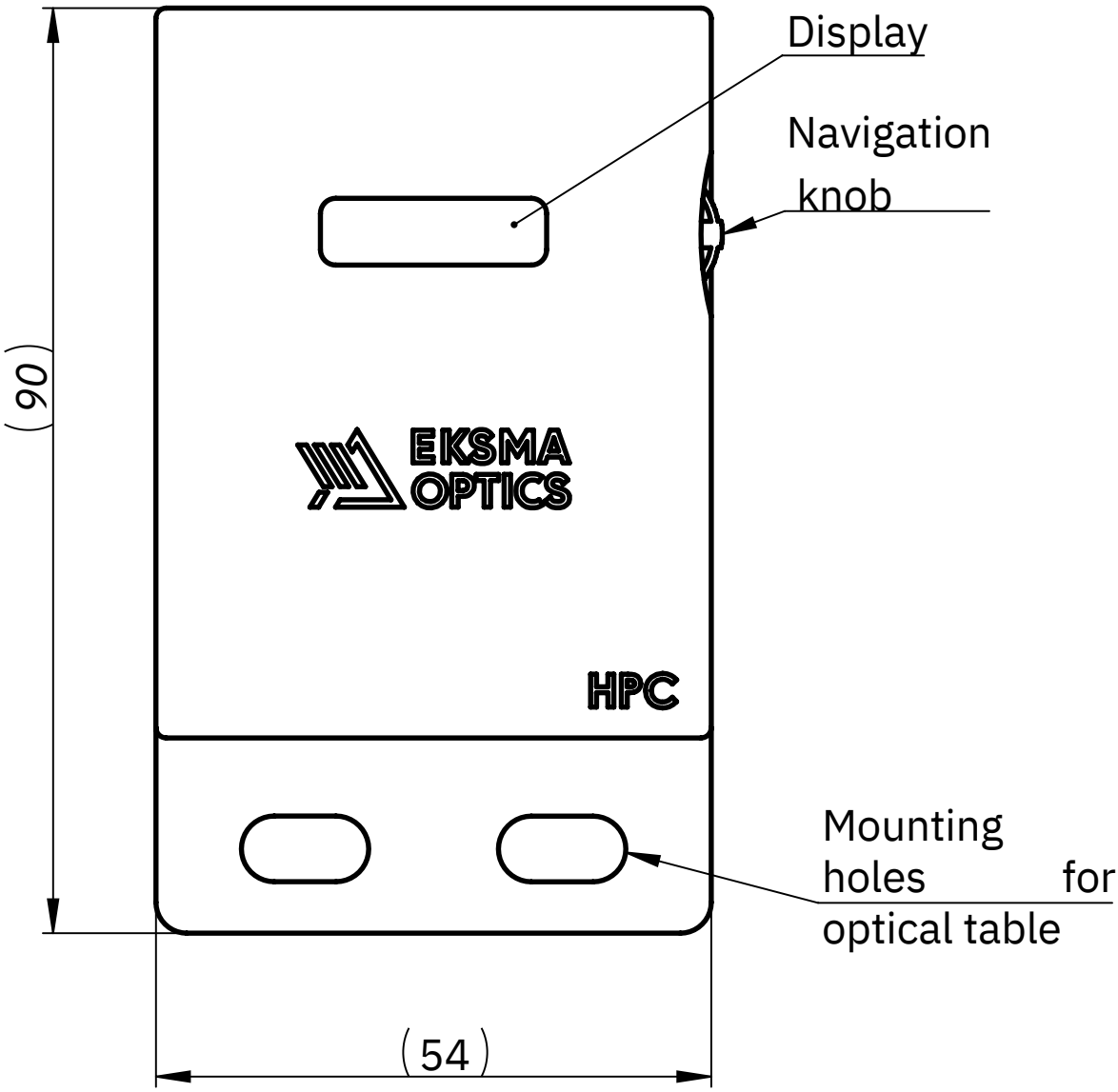
Display
Navigation knob
(90)
EKSMA OPTICS
HPC
Mounting holes for optical table
(54)

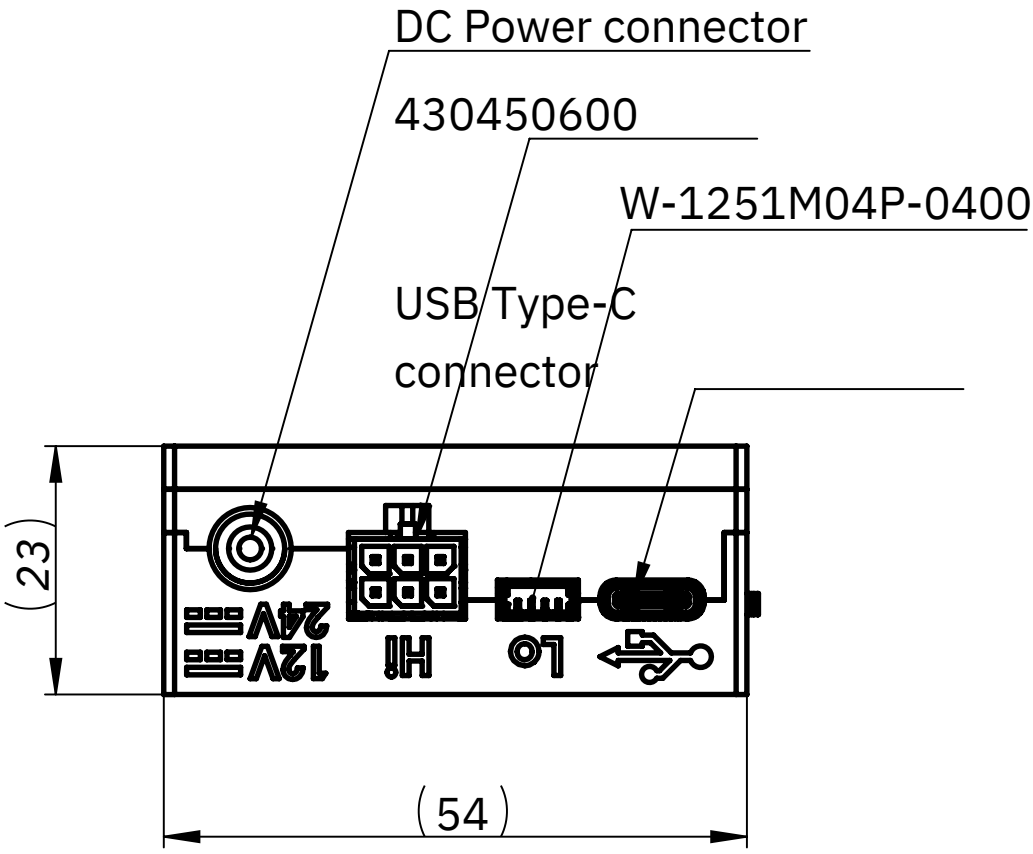
DC Power connector
430450600
W-1251M04P-0400
USB Type-C connector
(23)
12V
24V
Hi
Lo
(54)