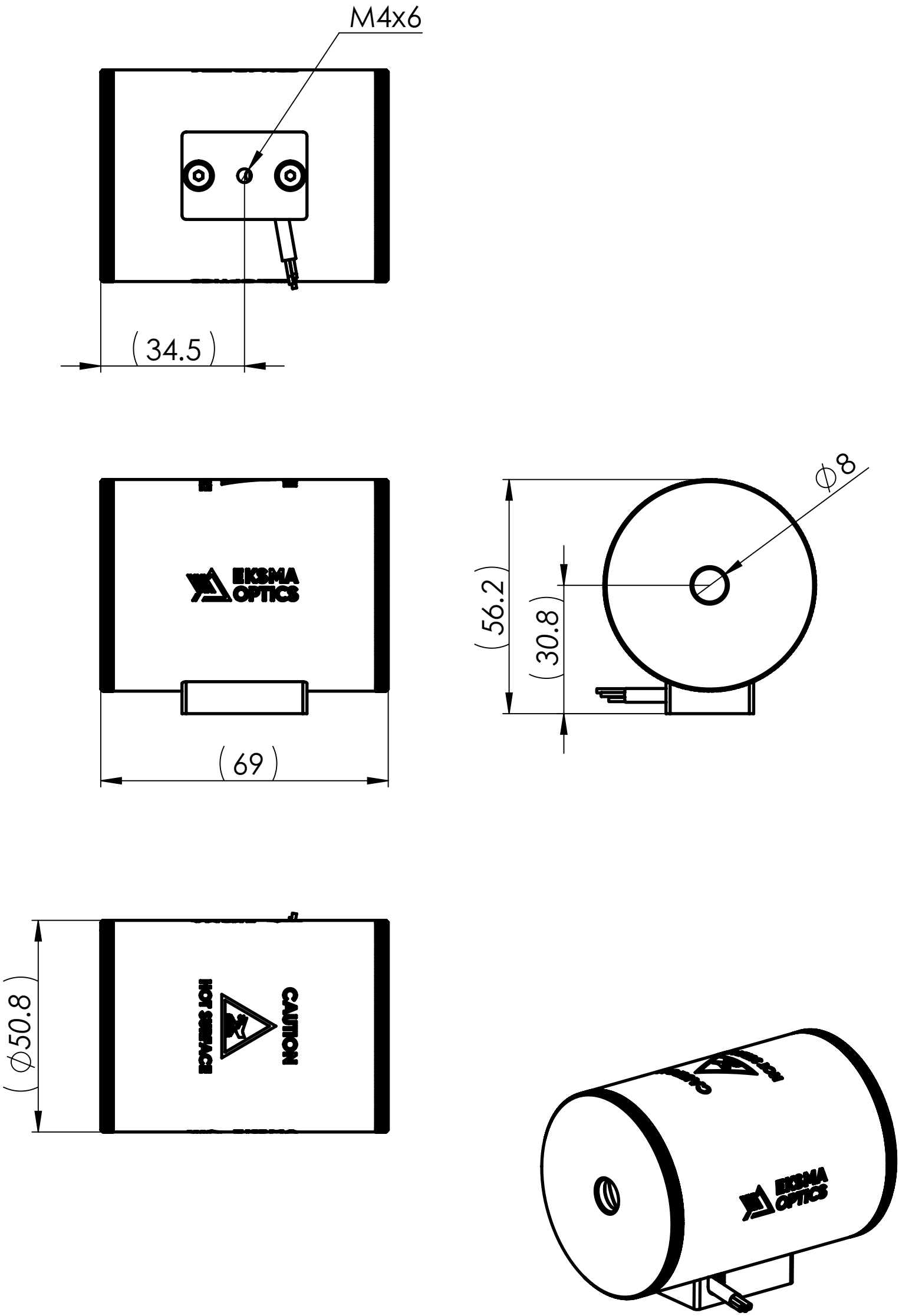
M4x6
(34.5)
EKSMA OPTICS
(69)
⌀8
(56.2)
(30.8)
CAUTION
HOT SURFACE
(⌀50.8)
EKSMA OPTICS