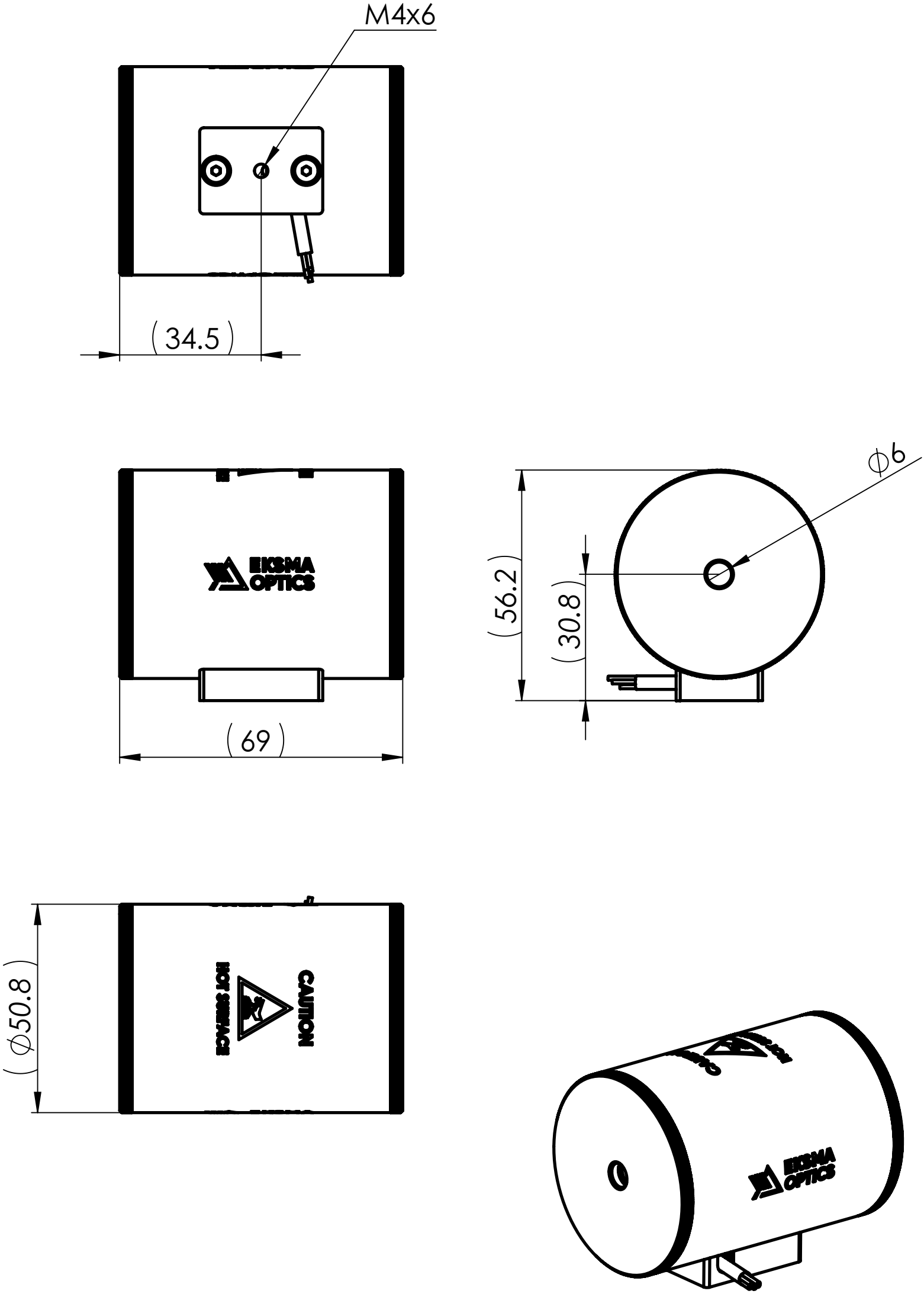
M4x6
(34.5)
EKSMA OPTICS
(69)
ϕ6
(56.2)
(30.8)
(ϕ50.8)
CAUTION
HOT SURFACE
EKSMA OPTICS