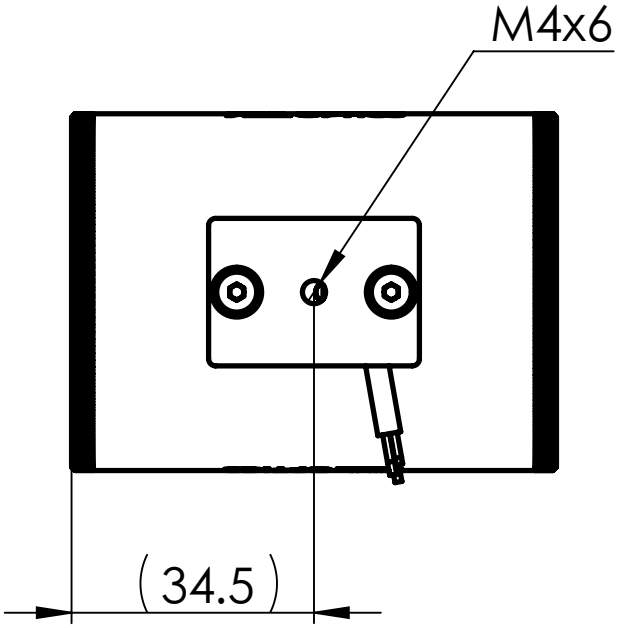
M4x6
(34.5)

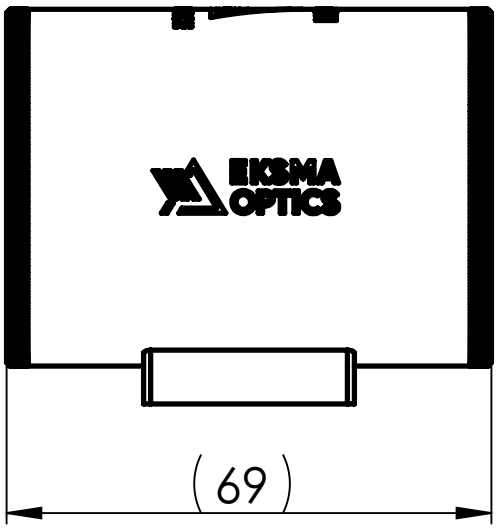
EKSMA OPTICS
(69)

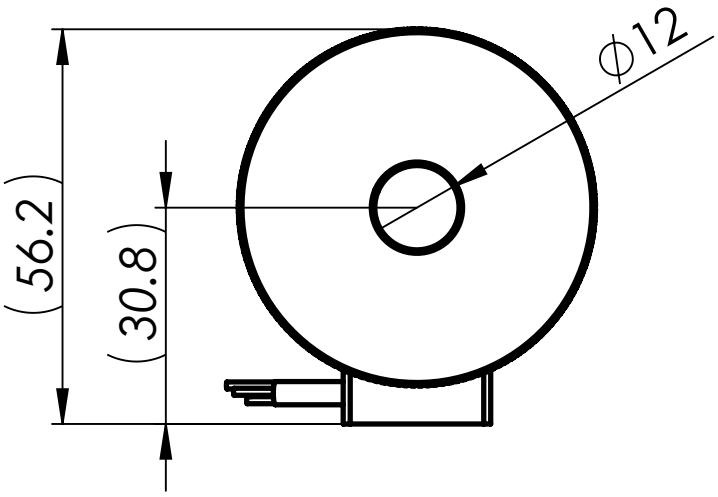
ϕ12
(56.2)
(30.8)

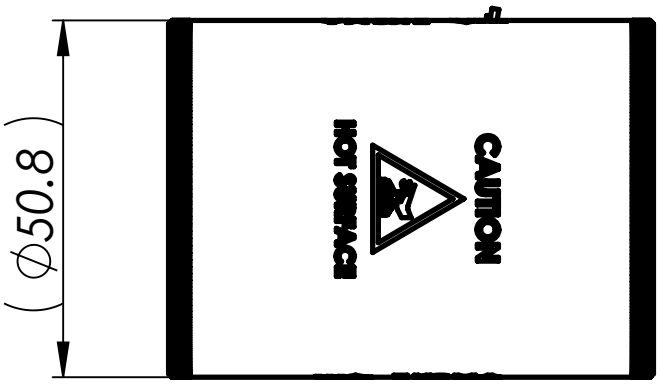
(ϕ50.8)
CAUTION
HOT SURFACE

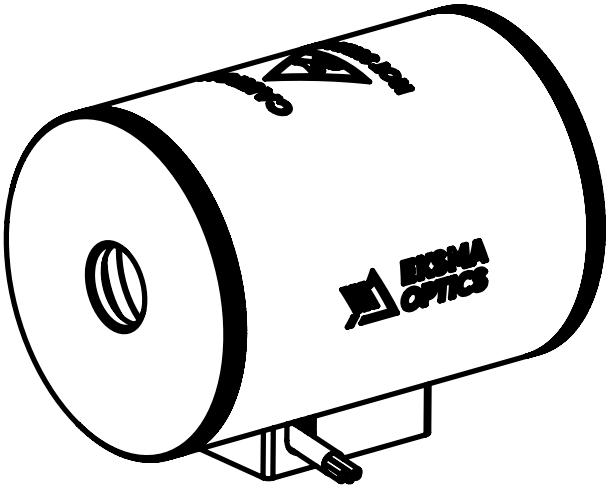
EKSMA OPTICS