840-0150-T LARGE APERTURE OPTICAL MOUNT

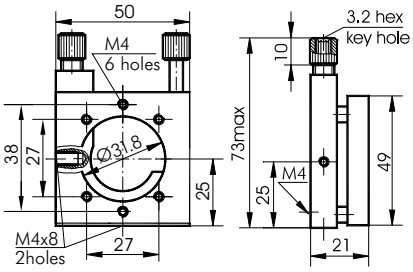

The Large Aperture Optical Mount 840-0150-T on its platform has Ø31.8 aperture and three M4 mounting holes. It is designed for precise orthogonal adjustment of mirrors.

Code	Weight, kg	Price, EUR
840-0150-T	0.09	79

840-0155 FLIPPING MIRROR / BEAMSPLITTER MOUNT

840-0155-01
(left hand version)

840-0155-01M
(right hand "Mirror" version)

optics stays in the experiment

optics flipped to the side

optics flipped out down

- **Flips optics in and out of the experiment**
- **Kinematic design**
- **Precise and handy angular adjustment in two orthogonal planes**
- **Stable vertical mounting**
- **Made of black anodized aluminium**
- **Mirror version available**

Use the Flipping Mount 840-0155 to place optics in and out of the optical scheme. Flip the platform out and back again – it sits on the adjustment screws in a repeated position. Precise alignment of various optical elements to desired angles is done by 2 adjustment screws.

3 seats form 3 kinematic points for definite position of the platform. The seats are made of hardened steel. This increases the service life, as they counter the hardened steel tips of adjustment screws and pivot balls.

Mount 840-0155 has a 1" mounting hole with Ø24 mm clear aperture. A fixing screw secures the optics against 2 contact lines, which make 2 contact points. To prevent damage to the optics, the tip of the fixing screw is made of plastic. On one side the edge of the optics stays clear. So you can use the optics close to the edge in schemes where you work with a beam very closely situated to another beam.

Ultra-Fine Adjustment Screws 870-0080 come as standard (one screw has its tips modified to form a kinematic point).

Depending on which side you mount the unit, flip the platform either vertically or horizontally. By flipping out vertically, the optics goes beneath the common level of the optical scheme. Still one leg of the base, with a adjustment screw on it, stays up. Yet this would not obstruct the optical path, as it would not when the optics was flipped in. Legs protruding upwards ease access to the adjustment screws, with less risk of obscuring the beam. There is no need to design the legs extended down, so as to clear the space totally.

SPECIFICATIONS

Fine screw thread	M6x0.25
Optics diameter	1"
Clear aperture	24 mm
Repeatability	20 µrad
Adjustment range	8°
Sensitivity	3 arcsec
Weight	0.09 kg

Code	Price, EUR
840-0155-01	135
840-0155-01M	135
840-0155-02	127
840-0155-02M	127

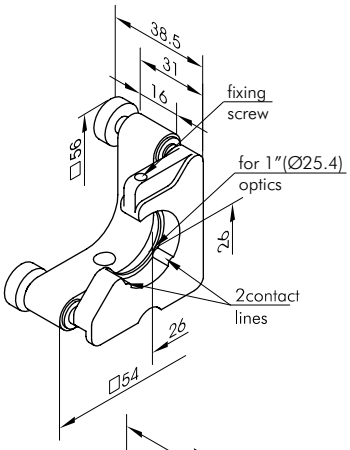

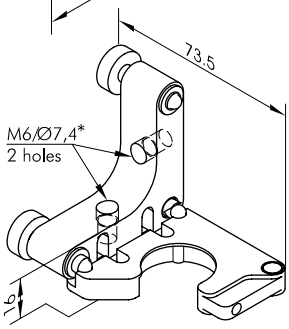

840-0155-01
uses Ultra-Fine Screws 870-0080 (with knobs) through combined M6/Ø7 mounting holes

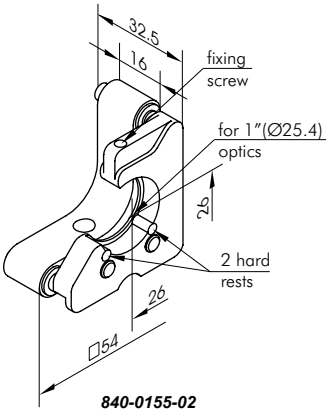

840-0155-02
uses Fine Hex Adjustment Screws (without knobs), hex key included